# Bevestigingspatroon

| | |
|---|---|
| REV | 0 |
| REV DATE | 24/10/25 |
| DWG NAME | C_PPSDT170IX_2D0_NP_PTRS-NL |

| | | | |
|---|---|---|---|
| **Art. Nr.** | = | PPSDT170IX | |
| **Bevestigingsmiddelen** | = | hout op harde ondergrond | Kolom tot harde steun |
| **Type bevestiging** | = | - | |

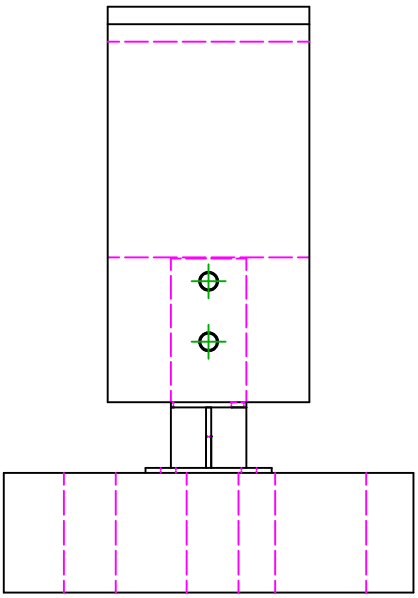

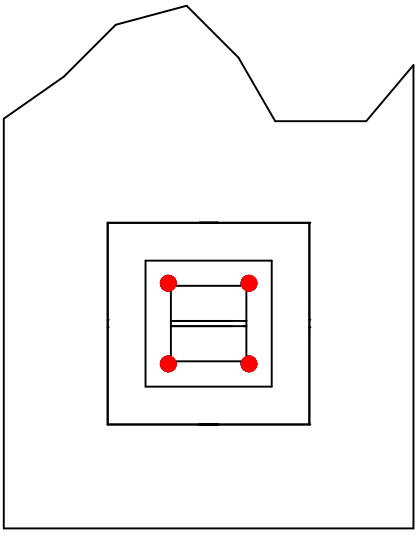

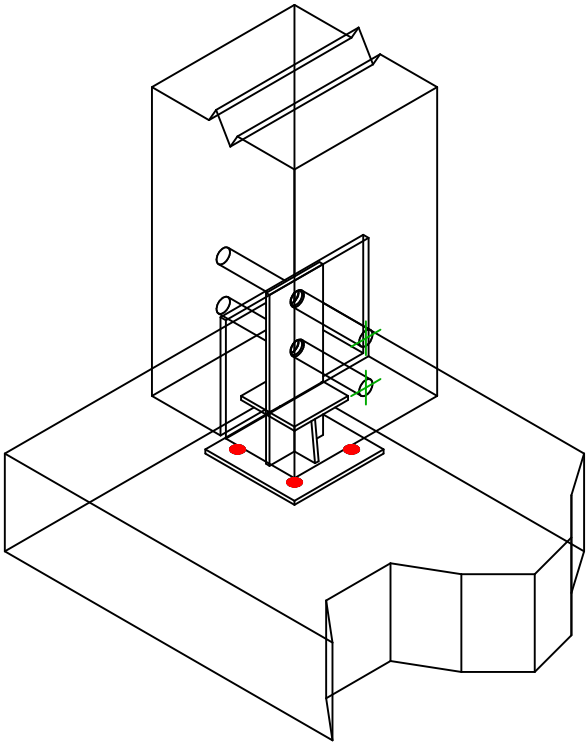

| | Symbool | Bevestigingsmiddelen | Art. Nr. | Aantal |
|---|---|---|---|---|
| **Draagbalk Bevestigingen** | | **FM** | **FM-753 M12X100/10 A4** | **4** |
| | | - | - | |
| | | - | - | |

| | Symbool | Bevestigingsmiddelen | Art. Nr. | Aantal |
|---|---|---|---|---|
| **Balk bevestiging(en)** | | **STDS** | **STDS12** | **2** |
| | | - | - | |